Trend - W

APPLICATIONS

- Railway
- Subways/Underground passages
- Prison
- Psychiatric Unit

CONSTRUCTION

- Fabricated sheet metal housing, fully welded construction, epoxy powder coated white
- Opal Polycarbonate diffuser 850° glow wire
- Stainless anti-tamper fixings

TECHNICAL DETAILS

- CRI>80
- CCT 4000K
- IK10+ Mechanical impact resistance
- Samsung LED's SDCM 3

DIMENSIONS

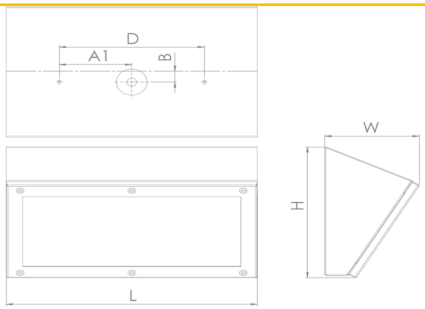

L, mm	W, mm	H, mm	D, mm	A, mm	B, mm
390	110	150	225	112,5	20

PRODUCT CODE	DESCRIPTION
TRW/11/4K/WH	TREND W 11W 1,208LM 380MM
TRW/13/4K/WH	TREND W 13W 1,526LM 380MM

OPTION	DESCRIPTION
/DALI	DALI Dimming
/M3	3Hr Emergency
/D3	3Hr DALI Monitored Emergency
/MW1	Microwave sensor

IP65

Ordering Format: Product Code / Option

Example: TRR/11/4K/WH/DALI